DATA SHEET

U 5.45

ROTARY VANE VACUUM PUMPS

oil-lubricated
air-cooled

MAKE IT BECKER.

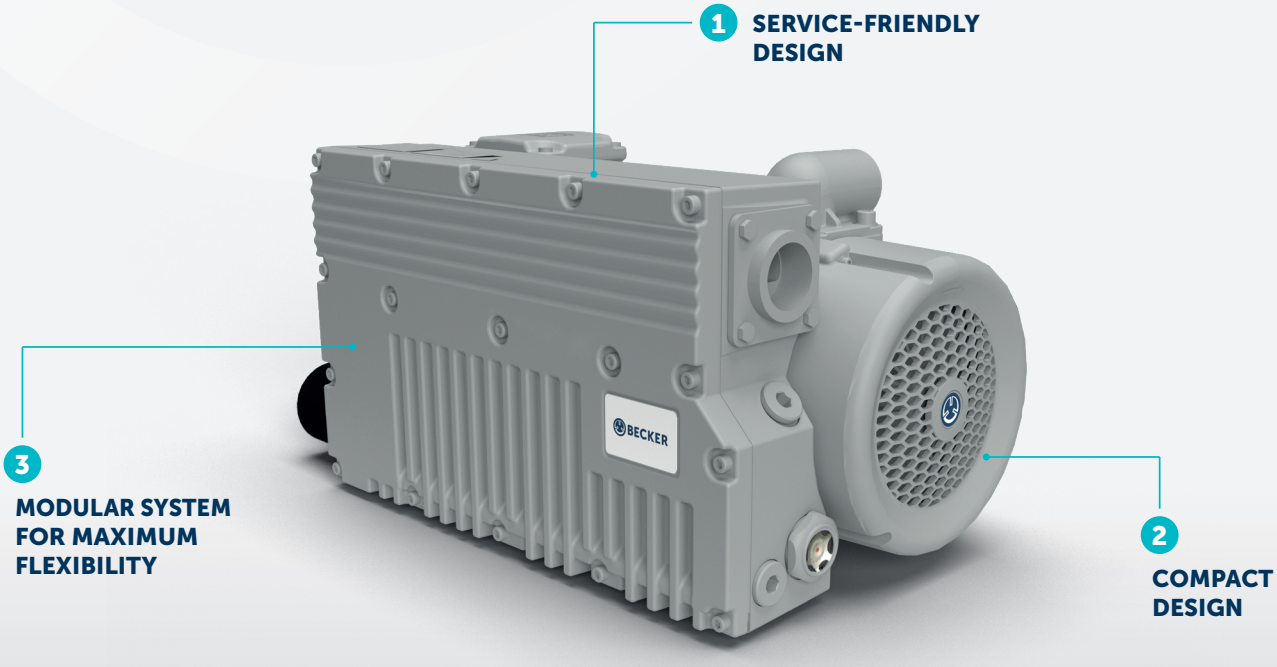

1. A service-friendly design allows for easy on-site maintenance, reducing unplanned downtime.
2. The pump's compact design with a small footprint minimizes installation space. Meanwhile, optimized airflow ensures highly efficient cooling performance.
3. The sophisticated design and a wide range of accessories enable customized solutions to meet specific requirements.

BECKER

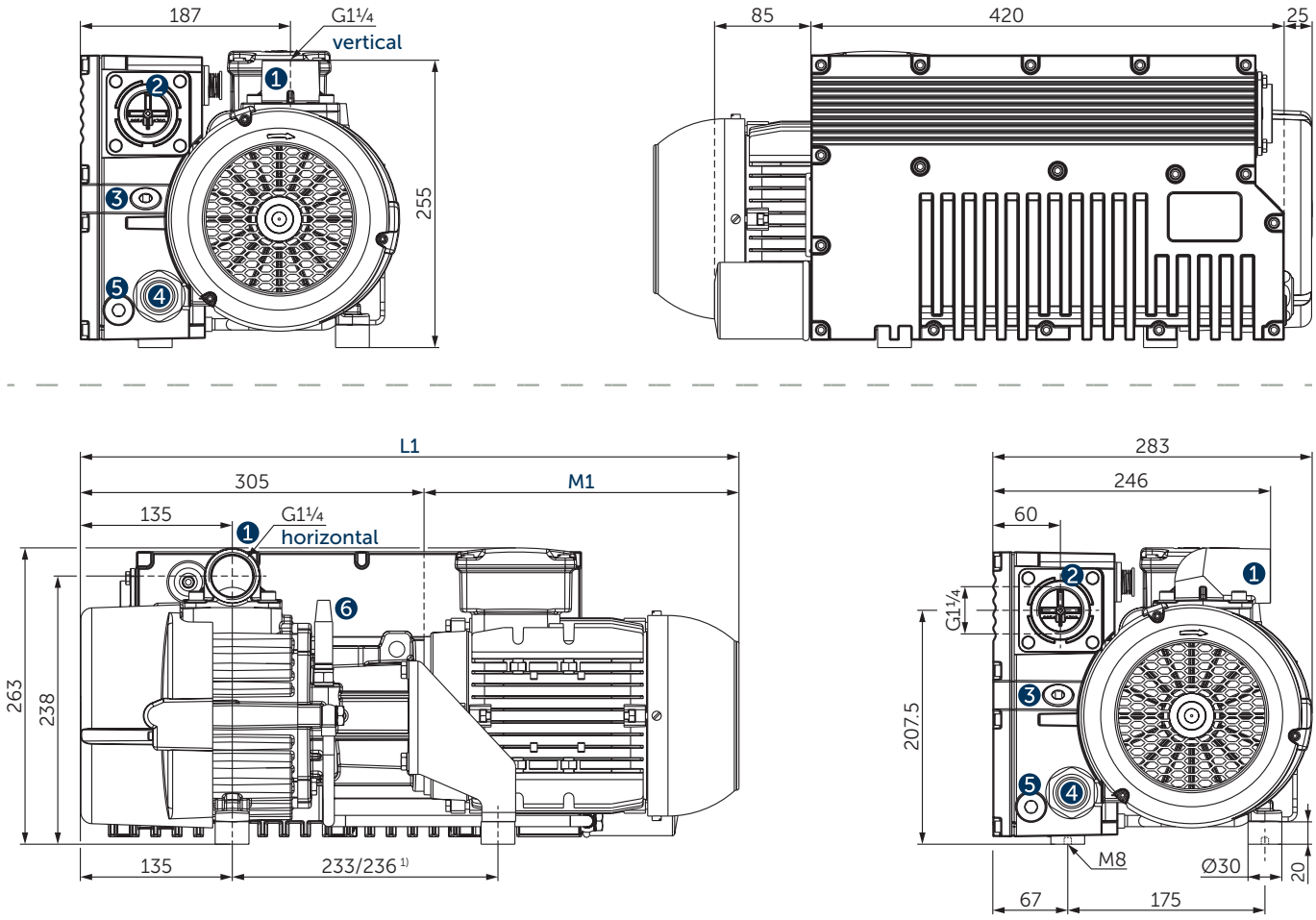

1 Vacuum connection (G1¼) vertical or horizontal, rotatable in 90° steps
2 Threaded connector for exhaust air (G1¼)
3 Oil filler cap
4 Oil sight glas
5 Screw plug for oil drain
6 Standard gas ballast valve 1.5 mbar absolute, alternative valve on request
L Overall device length L1 with motor. L1 and M1 are variable, see separate motor specification sheet.
1) Motor dependent
- Including oil filter, vibration dampers, integrated non-return valve and integrated oil separator
- The motor illustration may vary.
- Dimensions in mm

Nominal capacity		Vacuum absolute for continous operation		Installed motor power		Emission sound pressure level 1)		Weight w/o motor	Oil 2)
m^3/h		mbar		kW		dB(A)		kg	l
50 Hz	60 Hz	50 Hz	60 Hz	50 Hz	60 Hz	50 Hz	60 Hz		
45	54	0.5 3) – 300	0.5 3) – 300	1.5	1.5 – 1.8	62	64	≈31	1,0

1) Emission sound pressure level, with the highest measured values, L_{pA} (re 20 µPa): The values were determined according to the noise measurement DIN EN ISO 9614-2:1996-12, the basic standard DIN EN ISO 2151:2009-01 and DIN EN ISO 11203. Data according to DIN EN ISO 4871. Measurement uncertainty K_{pA} and K_{WA} of 3 db.
2) Becker Lube M 100 mineral, S 100 synthetic, SL 100 food and SM 100 food – application see operating instructions
3) Without gas ballast valve
- Water vapour tolerance max. 19.2 mbar, water vapour capacity max. 0.27 l/h (at 85°C operating temperature)

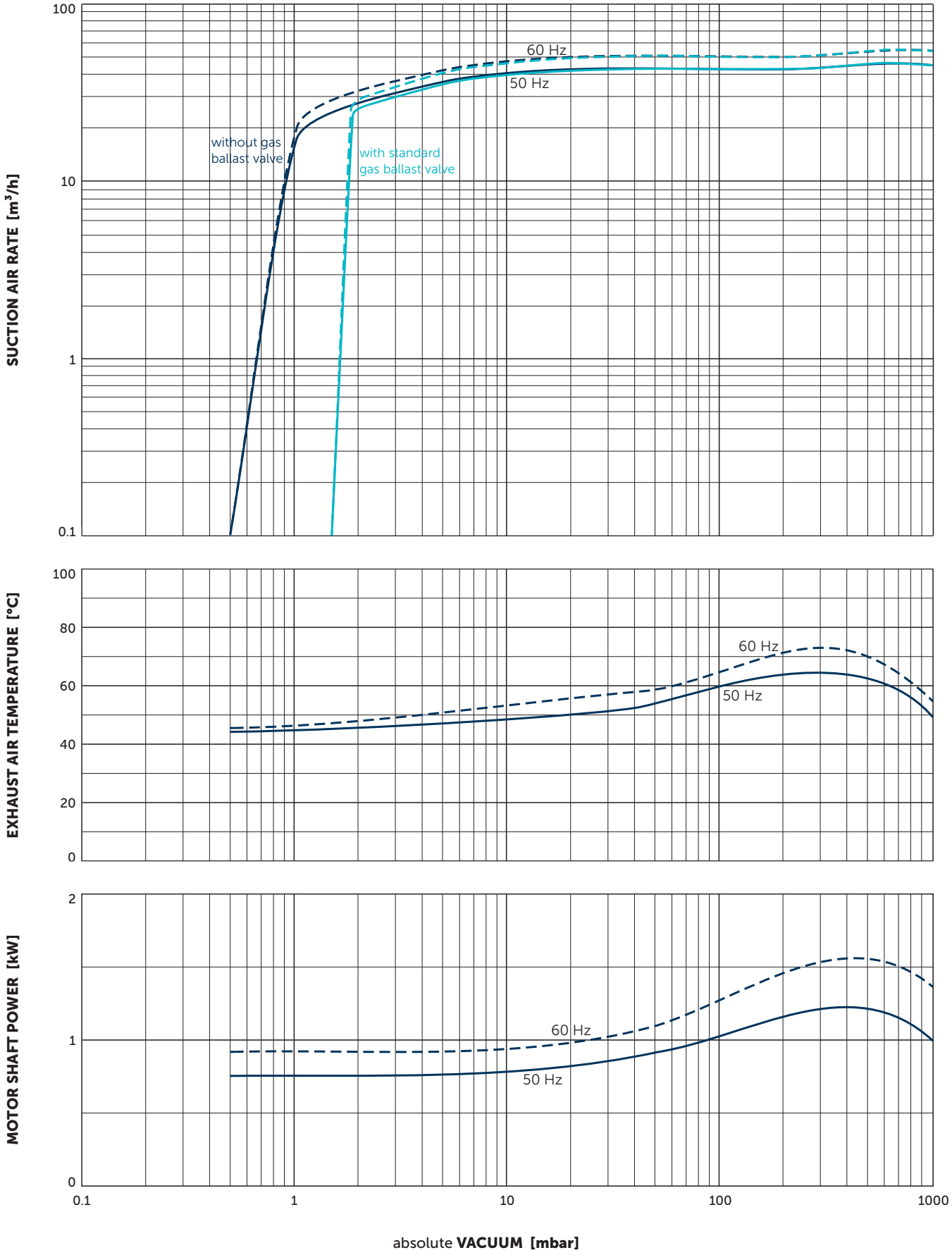

Suction air rate refers to the intake pressure
Reference data (atmosphere): 1000 mbar (100 kPa), 20°C (68°F)
Tolerance: ±10%

ACCESSORIES

- Becker Lube [1)]
  - **M 100** mineral
  - **S 100** synthetic
  - **SL 100** food
  - **SM 100** food

1 Maintenance indicator ST 691-0-3 [2)] (G½") for oil separating elements



ST 691-0-3

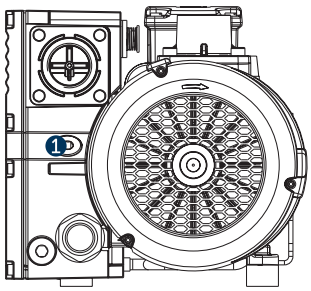

[1)] Application see operating instructions
[2)] See separate data sheet

Right of modification reserved 2026-08-17

MAKE IT BECKER.

MOTOR
SPECIFICATIONS

www.becker-international.com
www.becker-international-shop.com

BECKER